S11 AT, TRANSFER & EXTENSION
170-04 2/2 25 06 16 15:37

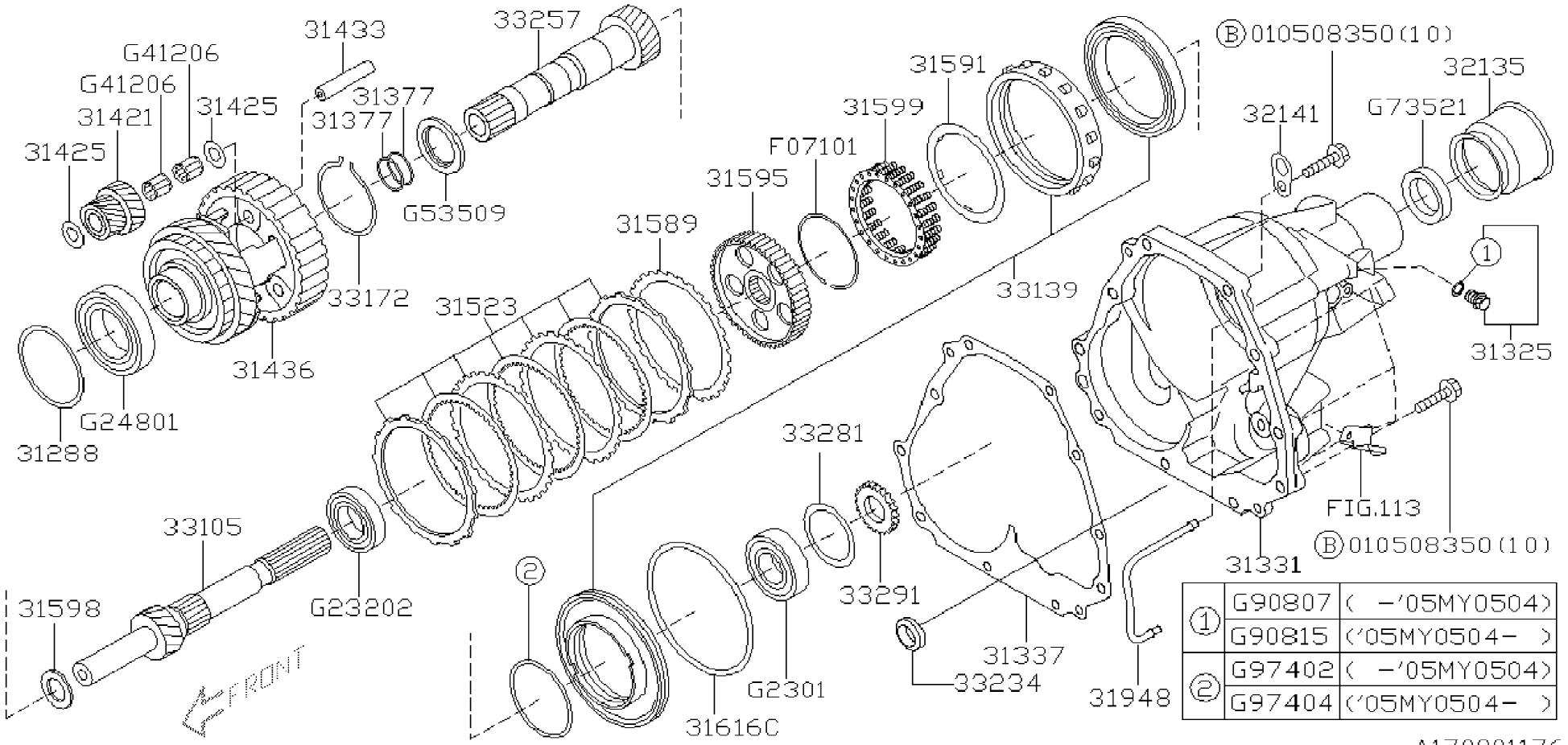

①	G90807	(-'05MY0504)
	G90815	('05MY0504-)
②	G97402	(-'05MY0504)
	G97404	('05MY0504-)