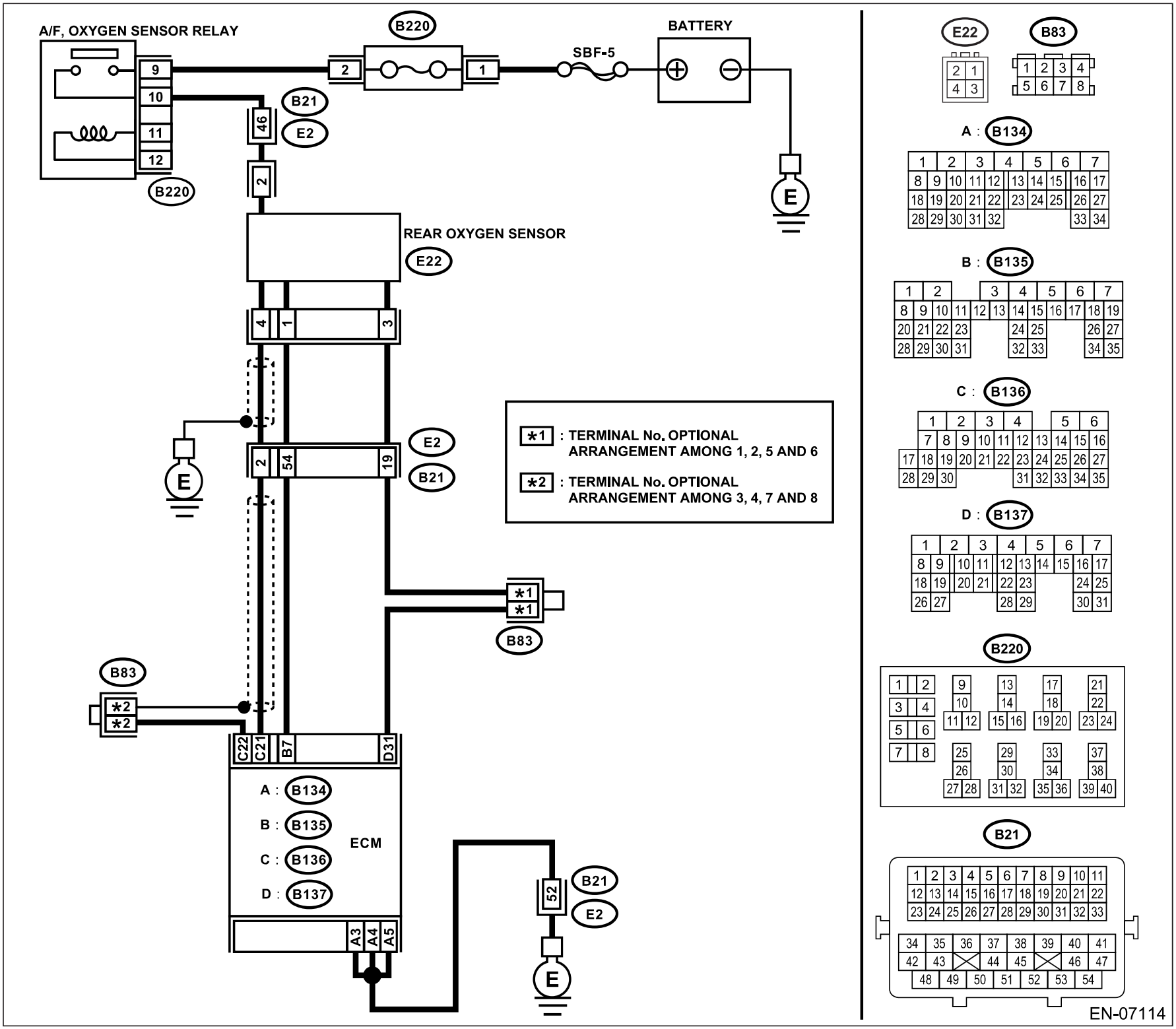
A/F, OXYGEN SENSOR RELAY
B220
BATTERY
SBF-5
B21
E2
REAR OXYGEN SENSOR
E22
E
*1 : TERMINAL No. OPTIONAL ARRANGEMENT AMONG 1, 2, 5 AND 6
*2 : TERMINAL No. OPTIONAL ARRANGEMENT AMONG 3, 4, 7 AND 8
B83
ECM
A : B134
B : B135
C : B136
D : B137
A : B134
B : B135
C : B136
D : B137
B220
B21
EN-07114