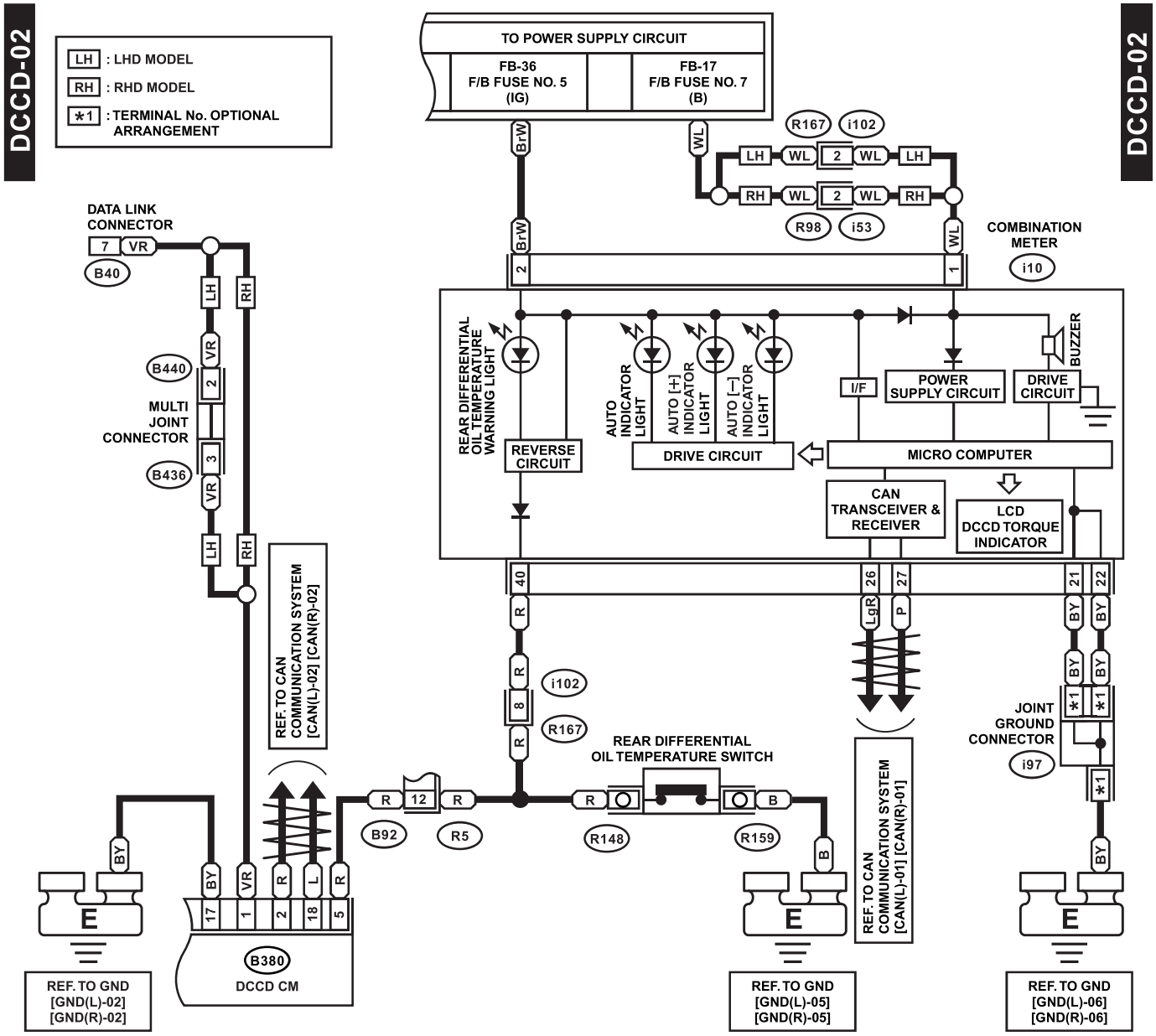
LH : LHD MODEL
RH : RHD MODEL
*1 : TERMINAL No. OPTIONAL ARRANGEMENT
TO POWER SUPPLY CIRCUIT
FB-36 F/B FUSE NO. 5 (IG)
FB-17 F/B FUSE NO. 7 (B)
R167
i102
R98
i53
COMBINATION METER
i10
DATA LINK CONNECTOR
B40
B440
MULTI JOINT CONNECTOR
B436
REAR DIFFERENTIAL OIL TEMPERATURE WARNING LIGHT
REVERSE CIRCUIT
AUTO INDICATOR LIGHT
AUTO [+] INDICATOR LIGHT
AUTO [−] INDICATOR LIGHT
DRIVE CIRCUIT
I/F
POWER SUPPLY CIRCUIT
DRIVE CIRCUIT
BUZZER
MICRO COMPUTER
CAN TRANSCEIVER & RECEIVER
LCD DCCD TORQUE INDICATOR
REF. TO CAN COMMUNICATION SYSTEM [CAN(L)-02] [CAN(R)-02]
REAR DIFFERENTIAL OIL TEMPERATURE SWITCH
B92
R5
R148
R159
REF. TO CAN COMMUNICATION SYSTEM [CAN(L)-01] [CAN(R)-01]
JOINT GROUND CONNECTOR
i97
B380
DCCD CM
REF. TO GND [GND(L)-02] [GND(R)-02]
REF. TO GND [GND(L)-05] [GND(R)-05]
REF. TO GND [GND(L)-06] [GND(R)-06]

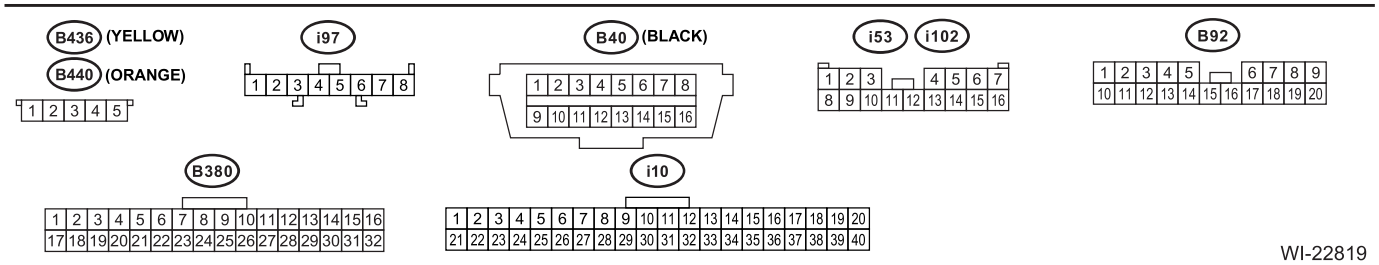
B436 (YELLOW)
B440 (ORANGE)
i97
B40 (BLACK)
i53
i102
B92
B380
i10

WI-22819