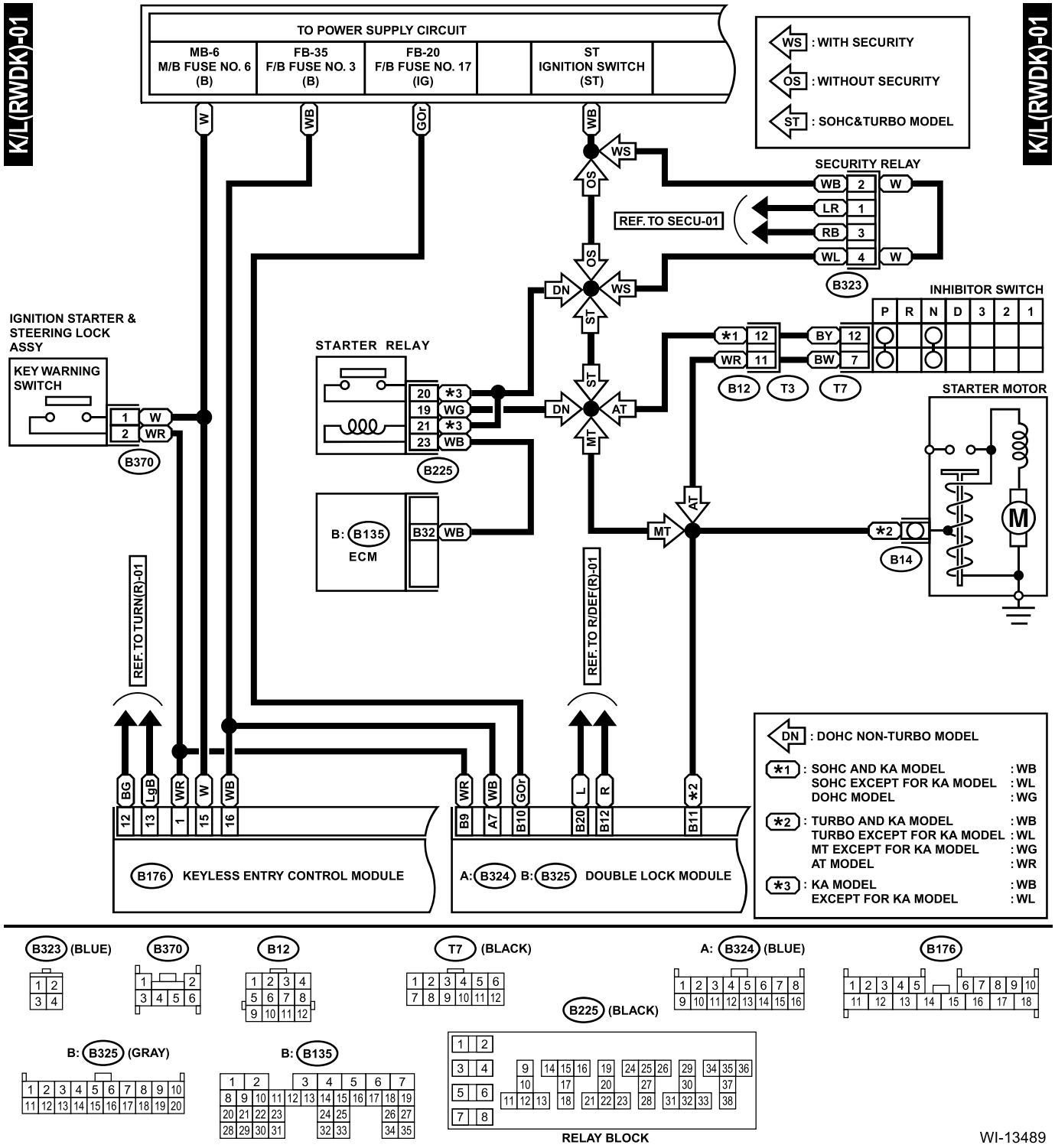
K/L(RWDK)-01
TO POWER SUPPLY CIRCUIT
MB-6 M/B FUSE NO. 6 (B)
FB-35 F/B FUSE NO. 3 (B)
FB-20 F/B FUSE NO. 17 (IG)
ST IGNITION SWITCH (ST)
WS : WITH SECURITY
OS : WITHOUT SECURITY
ST : SOHC&TURBO MODEL
SECURITY RELAY
REF. TO SECU-01
B323
INHIBITOR SWITCH
P R N D 3 2 1
B12 T3 T7
STARTER MOTOR
IGNITION STARTER & STEERING LOCK ASSY
KEY WARNING SWITCH
B370
STARTER RELAY
B225
B: B135 ECM
B32 WB
B14
REF. TO TURN(R)-01
REF. TO R/DEF(R)-01
DN : DOHC NON-TURBO MODEL
*1 : SOHC AND KA MODEL : WB
SOHC EXCEPT FOR KA MODEL : WL
DOHC MODEL : WG
*2 : TURBO AND KA MODEL : WB
TURBO EXCEPT FOR KA MODEL : WL
MT EXCEPT FOR KA MODEL : WG
AT MODEL : WR
*3 : KA MODEL : WB
EXCEPT FOR KA MODEL : WL
B176 KEYLESS ENTRY CONTROL MODULE
A: B324 B: B325 DOUBLE LOCK MODULE
B323 (BLUE)
B370
B12
T7 (BLACK)
A: B324 (BLUE)
B176
B: B325 (GRAY)
B: B135
B225 (BLACK)
RELAY BLOCK
WI-13489