WIRING DIAGRAM

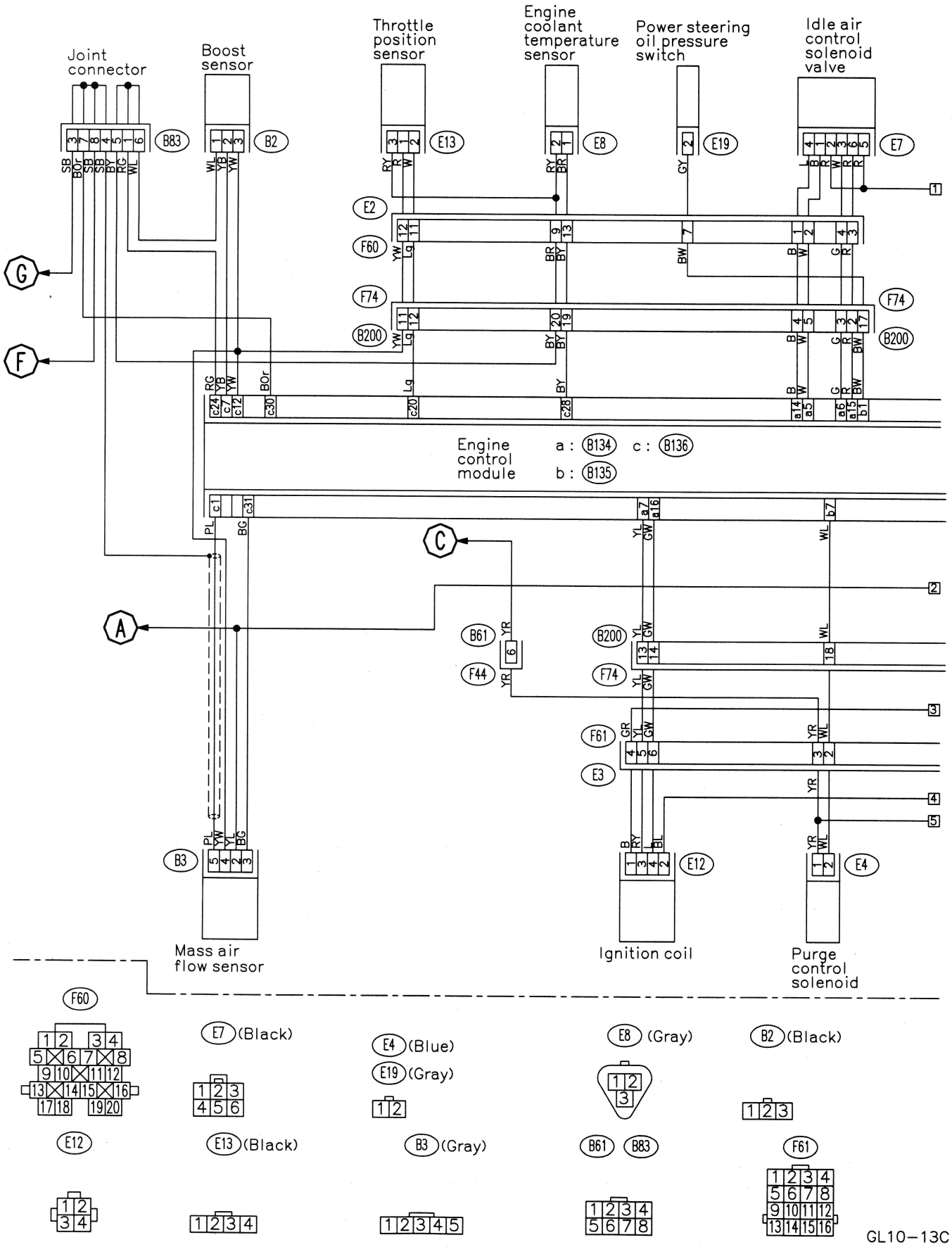

GL10–13C